Carrier

United Technologies

turn to the experts

greenspeed AQUAEDGE™

23XRV

High-Efficiency Variable Speed Screw Chiller

Cooling capacity: 1055~2110kW

Turn To The Experts

Founded by the inventor of modern air conditioning, Carrier is the world's leader in high-technology heating, air-conditioning and refrigeration solutions. Carrier experts provide sustainable solutions, integrating energy-efficient products, building controls and energy services for residential, commercial, retail, transport and food service customers. Carrier is a part of UTC Build ing & Industrial Systems, a unit of United Technologies Corp., a leading provider to the aerospace and building systems industries worldwide.

With a broad portfolio of advanced technical patent awards, our global R&D center in Shanghai develops innovative heat, ventilation and air-conditioning (HVAC) solutions.

In 1998, Time magazine named Dr. Carrier oneof its 20 most influential builders and titans of the 20thcentury.

Model number nomenclature

S — S - Special

0 — Compressor Option
0 –Full Load Optimized
1 –Part Load Optimized

9 — Voltage Code
3 – 380-3-60
4 – 416-3-60
5 – 460-3-60
9 – 380/415-3-50

CC —

Drive Code†	Max Input Current*	Max Output Current*
AA –LF2	440 amps	442 amps
BA –LF2	520 amps	442 amps
BB –LF2	520 amps	520 amps
CC–LF2	608 amps	608 amps
26	463 amps	480 amps
31	567 amps	588 amps
35	647 amps	658 amps
40	733 amps	745 amps
45	787 amps	800 amps

V — Motor Code
V X W

R — Compressor Code
Q*** R

N — Economizer Option
E –With Economizer N –No Economizer

42 — Condenser Size**
30-32 35-37 40-42
45-47 50-52 55-57

40 — Cooler Size**
30-32 35-37 40-42
45-47 50-52 55-57

23XRV — 23XRV: High-Efficiency Variable Speed Screw Chiller

*Maximum limits only. Additional application limits will reduce these ampacities.
**First number denotes frame size.
***Only type V motor is used with Q compressors.
†Drive code 25~45 are only available to Greenspeed™ standard VFD chillers

Cooling Capacity

1055~2110kW

Features

Carrier's AquaEdge™ 23XRV chiller is the world's first integrated variable speed, water-cooled, screw chiller with Greenspeed™ intelligence. It incorporates significant breakthroughs in water-cooled chiller technology to provide excellent reliability and achieve superior efficiencies at true operating conditions all without compromising the environment.

The 23XRV chiller provides:

- High efficiency: variable speed, positive displacement screw compressor.
- High-performance: certified to 0.299 kW/ton AHRI IPLV.
- Environment-friendly: chlorine-free HFC-134a refrigerant.
- Low harmonic distortion: IEEE-519-compliant .
- Versatile: ideal solution for constant and variable flow pumping systems .

High Efficiency

- Next-generation technology: The 23XRV incorporates high-efficiency screw compressor technology with an innovative tri-rotor design.
- Energy efficiency: This refrigerant-cooled, variable frequency drive (VFD) chiller has the ability to reduce speed and optimize operation independent of ambient conditions. This unique capability permits the chiller to precisely match building load and conserve energy.
- High part-load performance: IPLV to 0.299 kW/ton(Air Conditioning, Heating, and Refrigerant Institute (AHRI) integrated part load value)
- High-performance tubing: Carrier's AquaEdge chillers utilize advances in heat transfer technology, providing compact, high-efficiency heat exchangers. Tubing with advanced internally and externally enhanced geometry improves chiller performance by reducing overall resistance to heat transfer while reducing fouling.
- FLASC subcooler: Located in the bottom of the condenser, the Flash subcooler (FLASC) increases the refrigeration effect by cooling the condensed liquid refrigerant to a lower temperature, thereby reducing compressor power consumption.
- AccuMeter™ flow regulation: Regulating refrigerant flow according to load conditions, the AccuMeter system provides a liquid seal at all operating conditions and eliminates unintentional hot gas bypass.

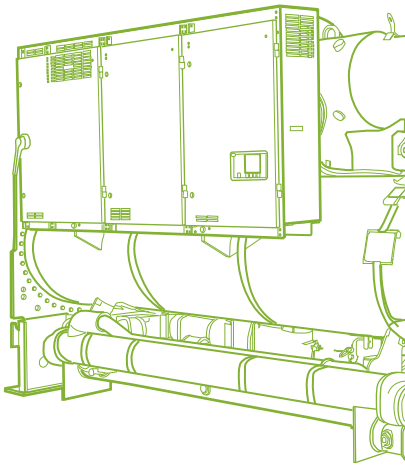

Reliability

- Advanced tri-rotor compressor: The tri-rotor compressor used in the 23XRV has been designed for extremely high reliability. It features balanced rotor geometry and shorter screw lengths, resulting in vastly reduced compressor bearing loads and a minimum L10 compressor bearing life in excess of 500,000 hours when operated at Air-Conditioning Heating and Refrigeration Institute (AHRI) standard conditions.
- Superior oil management: All AquaEdge 23XRV chillers regulate oil temperature, viscosity and pressure. Rather than relying on differential system pressure to lubricate the compressor, the 23XRV uses a patented process to ensure that high-quality oil is delivered to the compressor bearings via a positive displacement pump. This allows continuous operation with cold condenser water at all loads. Should the input power to the chiller be lost, the system is designed to assure proper lubrication of the bearings during coast down.
- Refrigerant-cooled VFD: Refrigerant cooling of the variable frequency drive (VFD) minimizes VFD size and ensures proper cooling of the transistors for extended life. Using R-134a refrigerant instead of water also eliminates costly maintenance of the water cooling pump, heat exchanger, and rubber tubing used with water-cooled VFDs.

Environmental Leader

- Sustainable long-term solution: The A
  Carrier's long-held commitment to
  innovation. The 23XRV offers cu
  chlorine-free chiller solution that will no
- Chlorine-free refrigerant: Carrier's
  HFC-134a refrigerant lets customers
  product without having to compromise

Reliability

- Cooler tube expansion: The cooler tube is fitted with expansion values at center support sheets to prevent unwanted tube movement and vibration, thereby reducing the possibility of premature tube failure. The tube wall is thicker at the expansion location, and at support and end-tube sheets, in order to provide maximum strength and long tube life.
- Double-grooved end-tube sheet holes: The double-groove design provides a more robust seal than single rolled joints, reducing the possibility of leaks between the water and refrigerant sides of the chiller.
- Fully charged at shipment: 23XRV chillers can be shipped fully charged with refrigerant from the factory, minimizing the time required for start-up. Furthermore, an option for in-chiller refrigerant storage reduces maintenance time.
- Positive pressure design: The positive pressure design used in the 23XRV ensures that air, moisture and other performance-degrading contaminants are not sucked inside the chiller. This eliminates purge units and their associated maintenance.

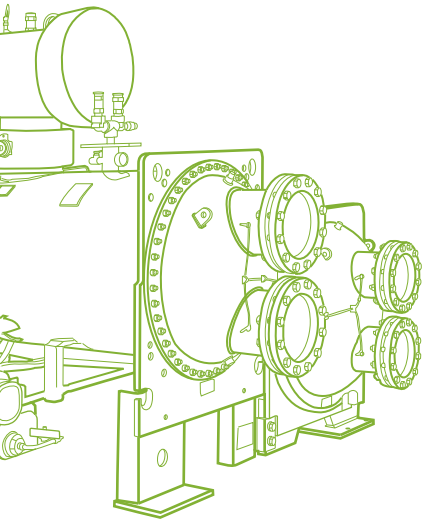

quaEdge 23XRV screw chiller epitomizes
the environment and its dedication to
stomers a long-term, high-efficiency,
t be affected by refrigerant phase outs.
decision to utilize non-ozone-depleting
select a safe and environmentally sound
on efficiency.

Advanced design, versatility

- The AuqaEdge™ 23XRV chiller equip with Premium unit mounted active rectifier variable frequency drive (LF2 VFD) which generates less than 5% total harmonic distortion (THD) at the input VFD without the use of any external filters or line reactors. This ensures that the VFD cannot exceed IEEE-519 standard for distortion at the point of common coupling. The integrated VFD provides a soft start, further reducing stress on the compressor and inrush current at start-up.
- This type of 23XRV is premium solution for industrial and commercial applications where installer, consultants and building owner require optimal performances and maximum quality, it's also especially suitable for those verticals which sensitive to harmonic, like data center, electronic factory, hospital, etc.
- Product Integrated Control (PIC III): Carrier's direct digital electronic controls (PIC III) provide unmatched flexibility and functionality. Each unit integrates directly with the Carrier Comfort Network® (CCN) system, providing a solution to controls applications.

23XRV(Greenspeed™ Premium VFD)

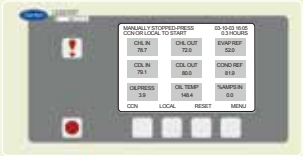

ICVC Control Panel

- In order to provide different application solutions for different verticals, 23XRV also can equip with Greenspeed™ standard unit mounted VFD which generates less than 35% THD, and this inverter with automatic energy optimization function, optimize energy savings due to quicker commissioning and better system efficiency. It's premium solution for commercial complexes, office buildings, hotels, also it's the preferred product for those buildings which need LEED certification.
- Equip latest PIC5 control system with strong control and monitoring function during chiller operation. The PIC5 control system applies a 7 inch high resolution touch screen, which can support more than ten language choices for customer, real time display of operation parameters with pictures makes it more human friendly and comfortable interface for operation.

23XRV (Greenspeed™ Standard VFD)

PIC5 (Touch Pilot Control Panel)

Performance Data (Greenspeed™ Premium VFD)

Model			23XRV3030 NQVAA90	23XRV3232 NQVAA90	23XRV4041 EQVAA90	23XRV4041 NRVAA90	23XRV4042 NRXAA90	23XRV4546 ERWCC90	23XRV5757 ERWCC90
Chiller	Cooling Capacity	kW	1055	1231	1407	1583	1758	1934	2110
		Tons	300	350	400	450	500	550	600
	Full Load COP	ikW/Ton	0.594	0.568	0.554	0.565	0.577	0.577	0.569
	NPLV	ikW/Ton	0.347	0.333	0.336	0.337	0.333	0.338	0.330
Electrical Data	Input Power	kW	178	199	222	254	288	318	341
	Chiller RLA	A	270	301	335	384	436	479	516
	Inrush Current	A	270	301	335	384	436	479	516
Cooler	Flow Rate	l/s	45.4	53.0	60.6	68.1	75.7	83.3	90.8
	Pressure Drop	kPa	72	54	52	65	78	104	58
	Water Connection	mm	DN200						
Condenser	Flow Rate	l/s	56.8	66.3	75.7	85.1	94.6	104.1	113.6
	Pressure Drop	kPa	83	61	48	59	60	94	55
	Water Connection	mm	DN200						DN250
Dimensionsr	Length	mm	4172	4172	4347	4347	4347	4867	4902
	Width	mm	1930	1930	2045	2045	2045	2045	2127
	Height	mm	2200	2200	2299	2299	2299	2299	2305
Weight	Rigging (W/Refrigerant)	kg	6953	7310	8404	8553	8640	9396	10826
	Operating	kg	7374	7864	9247	9396	9519	10315	12134
	Refrigerant	kg	295	295	408	340	340	460	649

Notes: 1. The above selection is based on AHRI conditions: evaporator leaving water temperature 6.67℃, 0.043 l/s·kW, fouling factor=0.018m² K/kW; condenser entering water temperature 29.44℃, 0.054 l/s·kW，fouling factor=0.044m² K/kW.

2. Carrier will select specific models to match customer tonnage, and efficiency requirements. For details, please contact local agencies.

3. The above selection is based on voltage of 400V. For details, please contact local agencies.

4. Standard Water Pressure is 1.0MPa. Options for 1.6MPa and 2.0MPa are available.

Performance data (Greenspeed™ Standard VFD)

Model			23XRV3030 NQV2590	23XRV3232 NQV2590	23XRV4041 EQV2590	23XRV4041 NRV3190	23XRV4042 NRV3190	23XRV4546 ERW3590	23XRV5757 ERW3590
Chiller	Cooling Capacity	kW	1055	1231	1407	1583	1758	1934	2110
		Tons	300	350	400	450	500	550	600
	Full Load COP	ikW/Ton	0.597	0.569	0.552	0.564	0.577	0.588	0.581
	NPLV	ikW/Ton	0.349	0.332	0.333	0.342	0.338	0.350	0.343
Electrical Data	Input Power	kW	179	199	221	254	288	323	348
	Chiller RLA	A	295	325	358	414	465	521	562
	Inrush Current	A	295	325	358	414	465	521	562
Cooler	Flow Rate	l/s	45.5	53.1	60.6	68.2	75.8	83.4	90.9
	Pressure Drop	kPa	72	54	52	65	78	104	58
	Water Connection	mm	DN200						
Condenser	Flow Rate	l/s	56.8	66.2	75.7	85.1	94.6	104.1	113.5
	Pressure Drop	kPa	83	61	47	59	60	94	55
	Water Connection	mm	DN200						DN250
Dimensionsr	Length	mm	4172	4172	4347	4347	4347	4867	4902
	Width	mm	2022	2022	2186	2186	2186	2400	2482
	Height	mm	2144	2144	2241	2241	2241	2518	2524
Weight	Rigging (W/Refrigerant)	kg	6477	6834	7928	8077	7824	9237	10667
	Operating	kg	6898	7388	8771	8920	9043	10156	11975
	Refrigerant	kg	295	295	408	340	340	460	649

Notes: 1. The above selection is based on AHRI conditions: evaporator leaving water temperature 6.67℃, 0.043 l/s·kW, fouling factor=0.018m² K/kW; condenser entering water temperature 29.44℃, 0.054 l/s·kW, fouling factor=0.044m² K/kW.

2. Carrier will select specific models to match customer tonnage, and efficiency requirements. For details, please contact local agencies.

3. The above selection is based on voltage of 400V. For details, please contact local agencies.

4. Standard Water Pressure is 1.0MPa. Options for 1.6MPa and 2.0MPa are available.

Chiller Dimensions

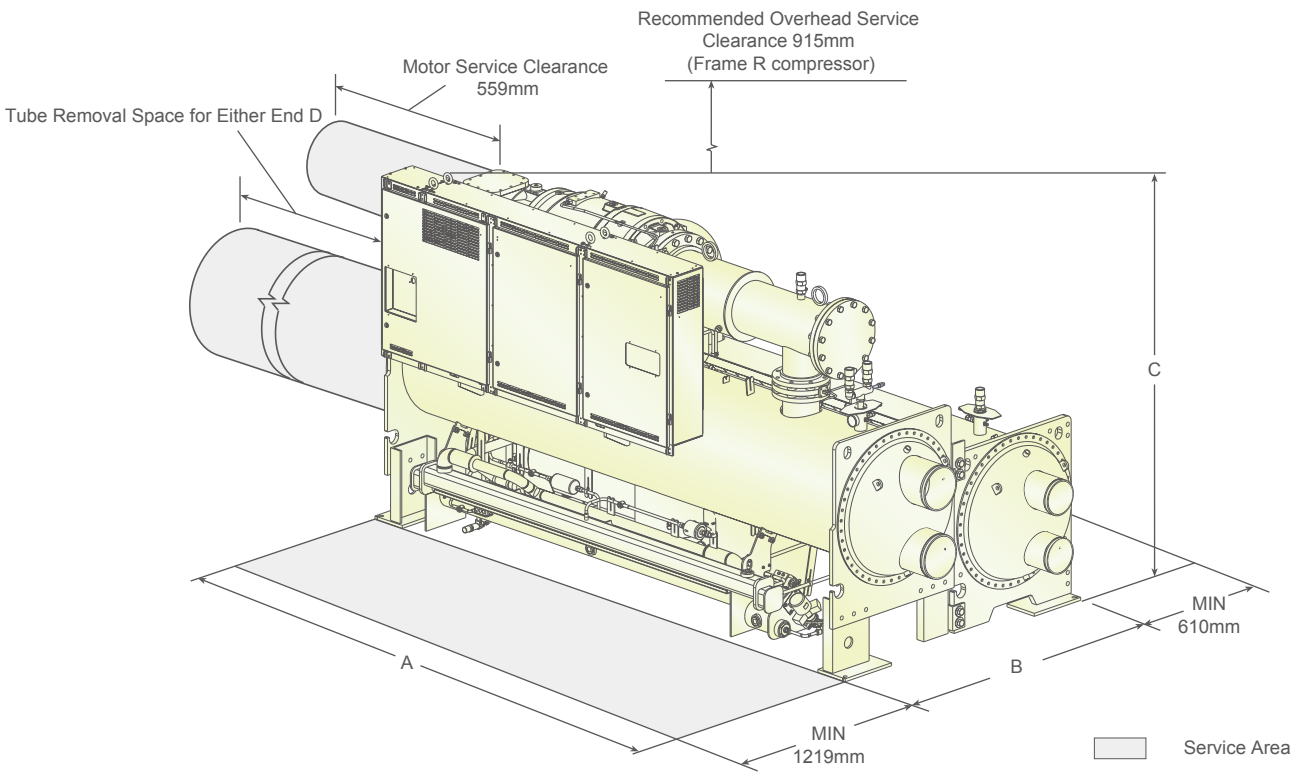

Note:Above diagram is available to 23XRV equip with LF2 VFD and Greenspeed™ Premium and Standard VFD chiller.

23XRV DIMENSIONS (NOZZLE-IN-HEAD WATERBOX)

Heat Exchanger	VFD	With Nozzle-in-Head Waterbox	B(Width)	C(Height)	D
		A(Length for 2 Pass)			(Removal space for either side)
Size	Size	mm	mm	mm	mm
30-32	AA~CC	4172	1930	2200	3848
35-37	AA~CC	4693	1930	2200	4369
40-42	AA~CC	4347	2045	2299	3848
45-47	AA~CC	4867	2045	2299	4369
50-52	AA~CC	4382	2127	2305	3848
55-57	AA~CC	4902	2127	2305	4369
30-32	25~31	4172	2022	2144	3848
35-37	25~31	4693	2022	2144	4369
40-42	25~31	4347	2186	2241	3848
	35~45	4347	2400	2518	3848
45-47	25~31	4867	2186	2241	4369
	35~45	4867	2400	2518	4369
50-52	25~31	4382	2295	2248	3848
	35~45	4382	2482	2524	3848
55-57	25~31	4902	2295	2248	4369
	35~45	4902	2482	2524	4369

Notes: 1. The above dimensions assume that both cooler and condenser nozzles are located on the same end of chiller.
2. Dimensions are approximate.
3. 'A' length and 'B' width dimensions shown are for standard 150 psig (1034 kPa) design and flange connections. The 300 psig (2068 kPa) design will add length. See certified drawings for details.
4. Standard connection is NIH. Marine waterbox is optional. See certified drawings for details.

Cooler Pressure Drop

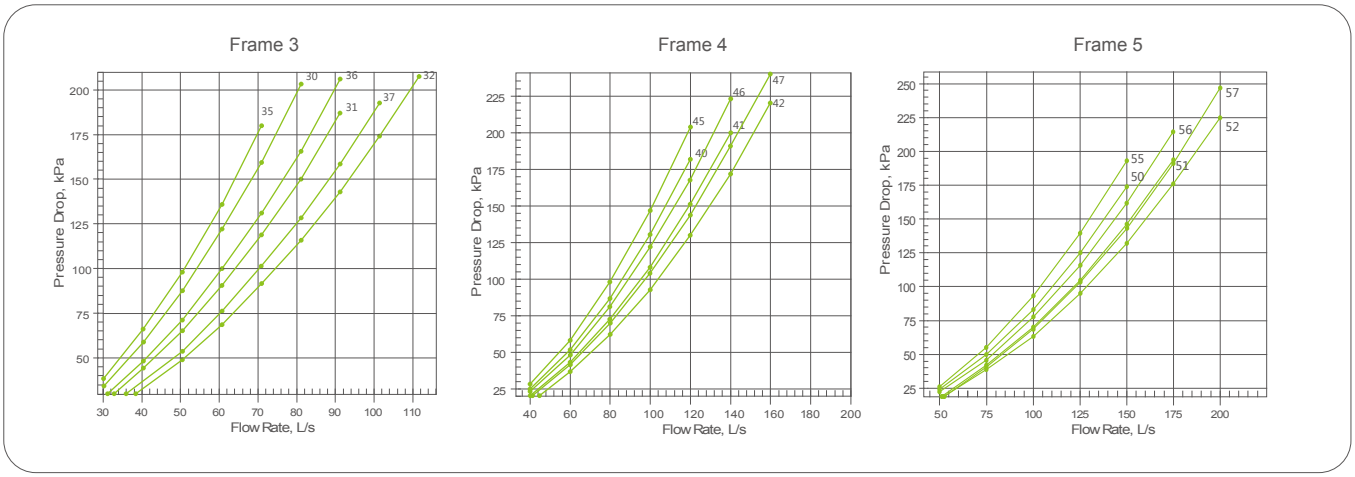

Cooler Min/Max Flow Rates

Cooler		1 Pass (L/S)		2 Pass (L/S)		3 Pass (L/S)	
		Min	Max	Min	Max	Min	Max
Frame 3	30	38	154	19	77	13	51
	31	46	185	23	92	15	62
	32	54	215	27	108	18	72
	35	38	154	19	77	13	51
	36	46	185	23	92	15	62
	37	54	215	27	108	18	72
Frame 4	40	62	249	31	125	21	83
	41	70	281	35	140	23	93
	42	77	307	38	154	26	112
	45	62	249	31	125	21	83
	46	70	281	35	140	23	93
	47	77	307	38	154	26	112
Frame 5	50	83	332	42	166	28	111
	51	93	374	47	187	31	125
	52	100	400	50	200	33	133
	55	83	332	42	166	28	111
	56	93	374	47	187	31	125
	57	100	400	50	200	33	133

Note: Flow rates based on standard tubes in the cooler and condenser. Minimum flow based on tube velocity of 3 ft/sec (0.91 m/sec);maximum flow based on tube velocity of 12 ft/sec (3.66 m/sec). Consult the factory if variable primary flow.

Condenser Pressure Drop

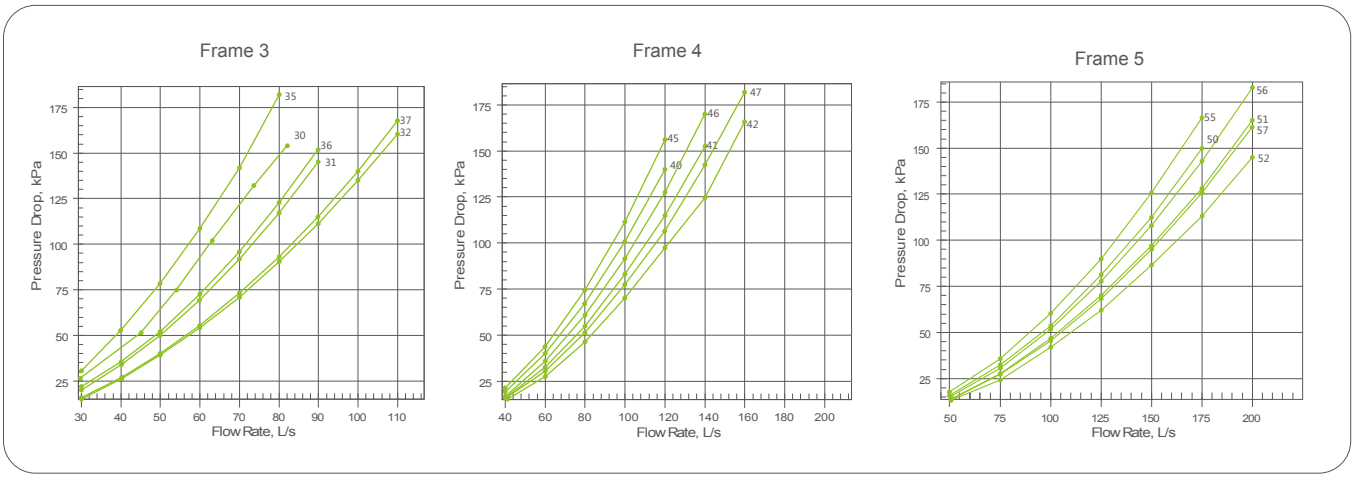

Condenser Min/Max Flow Rates

Condenser		1 Pass (L/S)		2 Pass (L/S)		3 Pass (L/S)	
		Min	Max	Min	Max	Min	Max
Frame 3	30	41	163	20	81	14	54
	31	50	199	25	100	17	67
	32	59	235	29	118	20	79
	35	41	163	20	81	14	54
	36	50	199	25	100	17	67
	37	59	235	29	118	20	79
Frame 4	40	69	277	35	138	23	92
	41	78	312	39	156	26	104
	42	86	346	43	173	29	115
	45	69	277	35	138	23	92
	46	78	312	39	156	26	104
	47	86	346	43	173	29	115
Frame 5	50	95	380	48	190	32	127
	51	104	416	52	208	35	138
	52	112	450	56	225	37	150
	55	95	380	48	190	32	127
	56	104	416	52	208	35	138
	57	112	450	56	225	37	150

Note: Flow rates based on standard tubes in the cooler and condenser. Minimum flow based on tube velocity of 3 ft/sec (0.91 m/sec);maximum flow based on tube velocity of 12 ft/sec (3.66 m/sec). Consult the factory if variable primary flow.

Nozzle Dimensions

NOZZLE-IN-HEAD WATERBOXES

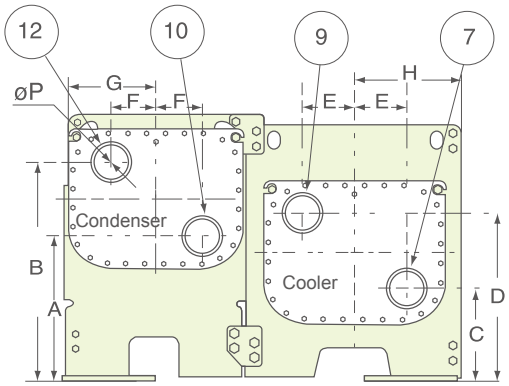

Discharge End

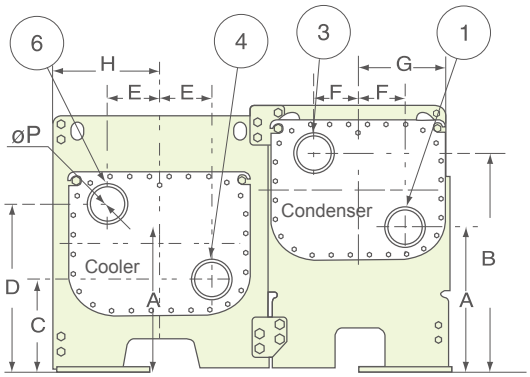

Suction End

Frame 3

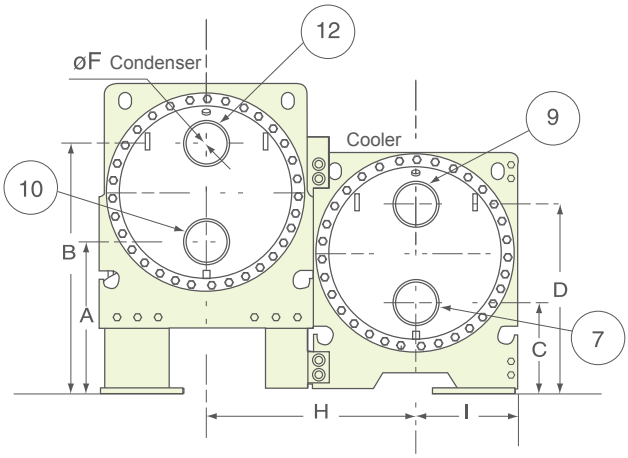

Discharge End

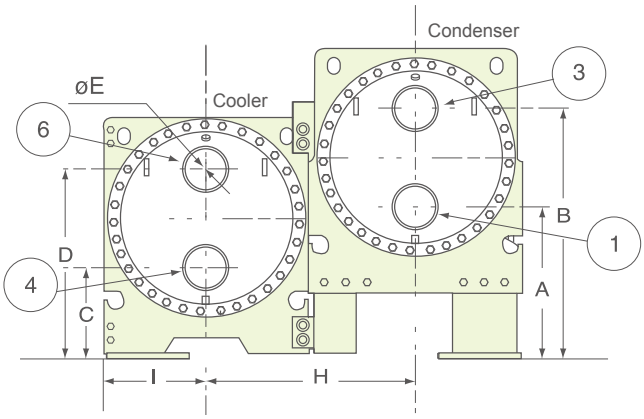

Suction End

Frame 4 and 5

Discharge End (Type A)
Arrangement Code C: 7 in and 9 out
Arrangement Code R: 10 in and 12 out

Suction End (Type B)
Arrangement Code D: 4 in and 6 out
Arrangement Code S: 1 in and 3 out

(mm)

Heat Exchanger Size		A	B	C	D	E	F	G	H	ØP
Frame 3	30~32 35~37	787	1048	562	832	213	152	381	454	DN200

Heat Exchanger Size		A	B	C	D	ØE	ØF	H	I
Frame 4	40~42 45~47	778	1146	651	1019	DN200	DN200	940	464
Frame 5	50~52 55~57	737	1168	483	851	DN200	DN250	997	489

Notes: 1. The above dimensions are based on standard 150 psig (1034 kPa) design. Dimensions will vary when the waterside pressure increases.
2. The suction end is on the left side of the chiller, facing the VFD, and the discharge end is on the right.
3. The above type A and type B are based on 2 Pass design. For 1 or 3 pass design, please contact local agencies.

Typical Piping and Wiring

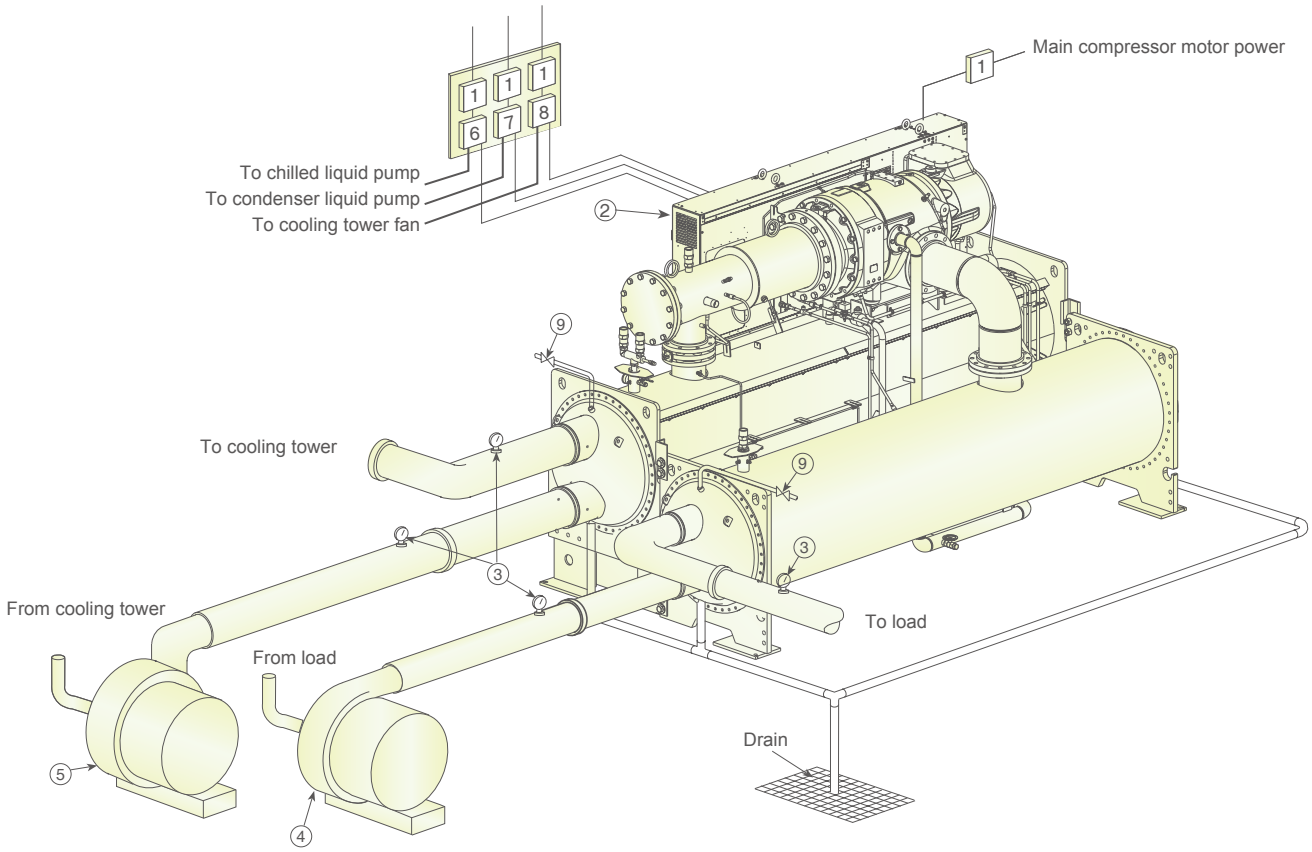

Legend:

1 - Disconnect
2 - Unit-Mounted VFD/Control Center
3 - Pressure Gages
4 - Chilled Liquid Pump
5 - Condenser Liquid Pump
6 - Chilled Liquid Pump Starter
7 - Condenser Liquid Pump Starter
8 - Cooling Tower Fan Starter
9 - Vents

Notes:1. Wiring and piping shown are for general point-of-connection only and are not intended to show details for a specific installation. Certified field wiring and dimensional diagrams are available on request.

2. All wiring must comply with applicable codes.

3. Wiring not shown for optional devices such as:

- Remote start/stop
- Remote alarms
- 4 to 20 mA resets
- Optional safety device
- Optional remote sensors
- kW output
- Head pressure reference

4. Flow switches are NOT required.

Piping
Control Wiring
Power Wiring

1. Electrical contractor shall supply and install main electrical power line, disconnect switches, circuit breakers, and electrical protection devices per local code requirements and as indicated necessary by the chiller manufacturer.
2. Electrical contractor shall wire the chilled water pump and flow, condenser water pump and flow, and tower fan control circuit to the chiller control circuit.
3. Electrical contractor shall supply and install electrical wiring and devices required to interface the chiller controls with the building control system if applicable.
4. Electrical power shall be supplied to the unit at the voltage, phase, and frequency listed in the equipment schedule.
5. Mechanical contractor shall supply and install pressure gages and thermometers in the entering and leaving water lines of the cooler and condenser. Scale range shall be such that design values shall be indicated at approximately midscale.
6. Mechanical contractor shall supply and install the filters in the chilled and cooling water piping system

Isolation

23XRV Machine Footprint

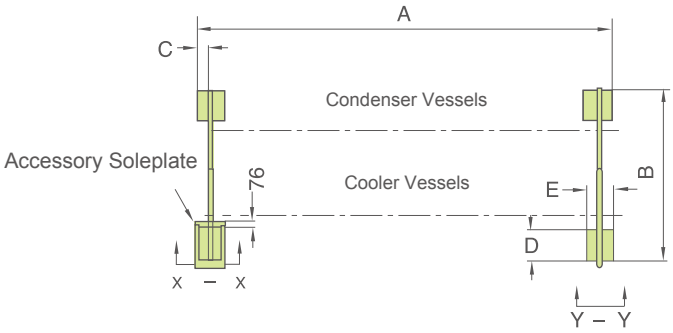

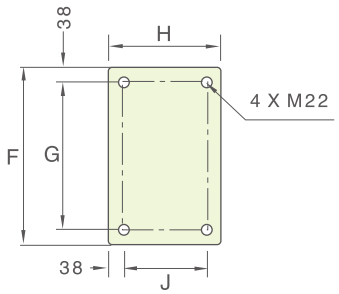

Standard Isolation(Isolation with isolation package only)

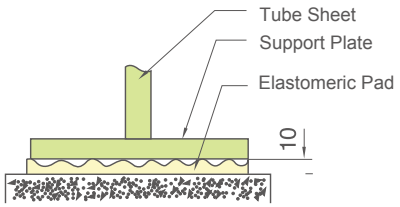

View Y-Y

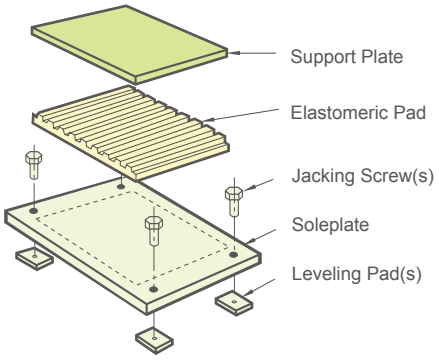

Typical Isolation

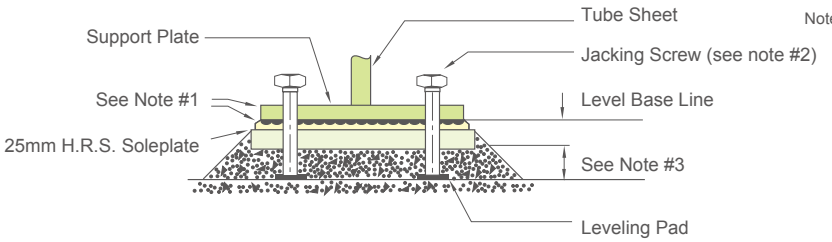

View X-X

Notes:
1. Accessory soleplate package includes 4 soleplates, 16 jacking screws and leveling pads. Requires isolation package.
2. Jacking screws to be removed after grout has set.
3. Thickness of grout will vary, depending on the amount necessary to level chiller.
4. Service clearance under the chiller is enhanced if leveling pads are not extended along the entire length of the heat exchangers.

(mm)

Heat Exchanger Size		A	B	C	D	E	F	G	H	J
Frame 3	30~32	3931	1632	92	387	229	540	464	254	178
	35~37	4451	1632	92	387	229	540	464	254	178
Frame 4	40~42	3931	1829	92	387	229	540	464	254	178
	45~47	4451	1829	92	387	229	540	464	254	178
Frame 5	50~52	3931	1969	92	387	229	540	464	254	178
	55~57	4451	1969	92	387	229	540	464	254	178

PICIII Microprocessor Controls

Microprocessor controls provide the safety, interlock, capacity control, indications, and accessibility necessary to operate the chiller in a safe and efficient manner.

Carrier controls also ensure proper starting, stopping, and recycling of the chiller and provide a communication link to the Carrier Comfort Network® (CCN) system.

The microprocessor control on each Carrier chiller is factory-mounted, factory-wired, and factory-tested to ensure machine protection and efficient capacity control.

Control system

- Component test and diagnostic check
- Programmable recycle allows chiller to recycle at optimum loads for decreased operating costs
- Menu-driven keypad interface for status display, set point control, and system configuration
- CCN system compatible
- Primary and secondary status messages
- Individual start/stop schedules for local and CCN operation modes
- Recall of up to 25 alarm messages and 25 alert messages with diagnostic help
- Two chiller lead/lag with third chiller standby is standard in the PIC III software
- Optional soft stop unloading decreases compressor speed to unload the motor to the configured amperage level prior to stopping
- Languages pre-programmed at factory for English, Chinese, Japanese, Korean
- ILT (International Language Translator) available for conversion of extended ASCII characters

Safety cutouts

- Motor high temperature*†
- Refrigerant (condenser) high pressure*†
- Refrigerant (cooler) low temperature*†
- Lube oil low pressure*
- Compressor (refrigerant) high discharge temperature*
- Under voltage**
- Over voltage**
- Cooler and condenser liquid flow
- Motor overload†
- Motor acceleration time
- Intermittent power loss**
- Motor stall protection
- Low level ground fault
- Cooler and condenser freeze prevention*
- Low oil temperature
- Line voltage imbalance**
- Line current imbalance**
- Line frequency
- Motor current imbalance
- Motor rotation reversal
- Excessive motor amps
- Motor starts limit
- VFD speed out of range
- High VFD rectifier temperature*†
- High VFD inverter temperature*†
- DC bus voltage (Low/High)

Indications

- Chiller operating status message
- Power-on
- Pre-start diagnostic check
- Compressor motor amps
- Alert (pre-alarm)††
- Alarm
- Contact for remote alarm
- Safety shutdown messages
- Elapsed time (hours of operation)
- Chiller input kW
- Demand kW

Capacity control

- Leaving chilled liquid control
- Entering chilled liquid control
- Soft loading control by temperature or
- load ramping
- Hot gas bypass valve (optional)
- Power (demand) limiter
- Automatic chilled liquid reset (3 methods)
- Manual speed control

Interlocks

- Manual/automatic remote start
- Starting/stopping sequence
  Pre-lube/post-lube
  Pre-flow/post-flow
- Compressor run interlock
- Pre-start check of safeties and alerts
- Low chilled liquid (load) recycle
- Monitor/number compressor starts and run hours
- Manual reset of safeties

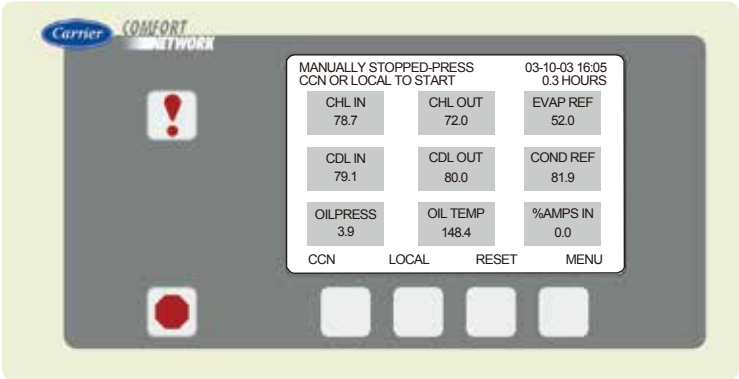

ICVC Control Panel

*	Can be configured by the user to provide alert indication at user-defined limit.
†	Override protection: Causes compressor to first unload and then, if necessary, shut down.
* *	Will not require manual reset or cause an alarm if autorestart after power failure is enabled.
† †	By display code only.

PIC5 Control System - Intelligent Colorful Touch Screen

Equip latest PIC5 control system with strong control and monitoring function during chiller operation. The PIC5 control system applies a 7 inch high resolution touch screen, which can support more than ten language choices for customer, real time display of operation parameters with pictures makes it more human friendly and comfortable interface for operation.

This PIC5 control system simulates and monitors chiller operation, adjusts cooling capacity according to load change and provides various protections during operation.

PIC5 control system provides customer security code to avoid any setting change without authorization. There are three levels of access with individual security code.

Reliable Start-up and Operation

- When chiller receives start-up order, controller will conduct following pre-start safety checking, to ensure parameters like oil sump temperature, condensing pressure, motor winding temperature, discharge temperature, evaporator saturated temperature and average line voltage etc. are normal.
- During chiller operation, except for the function of monitoring main operation parameters
- PIC5 control system also has capability to record and display trend curve, which is real time trend of key components during operation. It ensures effective and reliable operation of chiller by optimized intelligent and dynamic control algorithm.

Effective Failure Diagnostic

- PIC5 control system has comprehensive protection during operation, such as oil sump temperature control, surge protection, overvoltage and overcurrent protection, discharge temperature overheat protection, evaporator and condenser anti-freeze protection, low discharge superheat protection etc. in order to ensure chiller long time reliable operation.
- PIC5 control system has failure diagnostic function and can be easily accessed via touch screen for detail chiller operation parameters. If control system detects failure the alarm will be initiated and related code will be recorded in alarm menu. The alarm records can be automatically saved by PIC5 control system. Customer or Carrier service technician can read and delete alarm records by Carrier service/PCDCT tools.
- PIC5 control system has additional pre-diagnostic function. Different with diagnostic function, information displayed from this function is mainly for maintenance purpose. For an example, to inform customer periodically replace lubricant and filter from this function.
- PIC5 control system has email alarm function. PIC5 control system can automatically send out an email with one or more alarm information to customer or service people through effective email address when alarm exists

Flexible control interface

- The installation of Carrier PIC5 colorful touch screen is very flexible. It greatly improves the convenience that customer can install touch screen at any corner of the chiller.
- The customer can not only directly operate on touch screen but also use the port to connect with Ethernet and operate via web page. Customer just needs to input controller IP address into the browser's address bar during operation in internet explorer.
- PIC5 control system has function of wireless monitoring and operation. i-Phone or i-Pad can be connected with chiller at anytime and anywhere with WiFi by downloading and installing App software in advance.
- Except for Ethernet, PIC5 control system facilitates various accesses, such as LEN, USB and Carrier CCN access to meet customer and service people selections.
- PIC5 is compatible with Carrier i-Vu control network and integrated Bacnet/IP protocol.
- PIC5 also facilitates protocol converter for Modbus and Lonworks to simplify the seamless connection with building control systems.

Control system main page operation and primary parameters monitored:

1) Main page button
2) Menu page button
3) Log in /Language button
4) Start-up/Stop page button
5) Alarm menu button
6) Setting point
7) Chiller load percentage
8) Inlet Guide Vane position percentage
9) Oil sump temperature
10) Oil pressure difference
11) Condensing water pump status
12) Chilled water pump status
13) Condenser water inlet/outlet temperature
14) Evaporator water inlet/outlet temperature
15) Condenser saturated temperature and pressure
16) Condenser saturated temperature and pressure

Customer can easily read primary information of chiller, components status and access to other interfaces from this page. They are:

- General parameter page
- Temperature/Pressure page
- Input/Output parameter page
- Water system parameter page
- Operation time
- Mode
- Graphic data trend

Carrier Smart
Browser APP
i-Phone Access

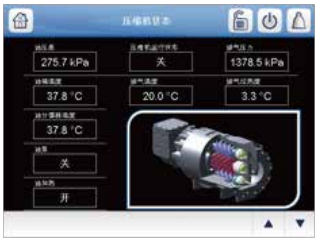

improve buildings™

Carrier improves the world around us; Carrier improves people's lives; our products and services improve building performance; our culture of improvement will not allow us to rest when it comes to the environment.

Carrier
United Technologies

United Technologies
Building & Industrial Systems

www.carrier.com

The Manufacturer reserves the right to change any produt specifications without prior notices
© All Rights Reserved Carrier

Version:	CAT_23XRV_E-1505_05
Supersede:	CAT_23XRV_E-1411_04
Effective Date:	May, 2015